Partituret kopieres i liggende B4

Stemmer = 5 stående spillepartitur A3

NB noter
This music is copyright protected

Knut Vaage:

multiMORF VII

for
5 amplified brass instruments* and computer
(*2 Trumpets in C, Horn in F, Trombone, Tuba)

2021
(version 1st of November 2021)

to NyNorsk Messingkvintett

Programming and processing by Thorolf Thuestad. Visuals by Evelina Dembacke

Score with appendix: overview Sound material (page 26-29)
(Performance score with page turns (to be used by the musicians) exists separately)

This music is copyright protected
NB noter

ACKNOWLEDGMENT:
multiMORF VII is the final piece of the project *multiMORF remix*, started on initiative from NyNorsk Messingkvintett. *multiMORF remix* contents of *multiMORF V, VI* and *VII*

ABOUT THE NOTATION OF THE SCORE:
Score is transposed (Horn in F is the only transposing instrument)
There are no parts for this piece, the musicians perform from the score
Part named "Fragment 3" or "Morf 5" etc are not chronologically numbred. The numbers are refearing to a workshop prosess to generate material.
The last pages of the score with parts called "Sound material" are for refernce only. Some of it has been used to generate parts of the electronics, and some used in the score
For the premiere version sound files was constructed from the prerecorded sound material and named: Sound material experiment 1 - 5.
For detailed info, see explanations throughout the score and overview on page 3 and at page 27-29.

DURATION: ca 25 min

Commissioned by NyNorsk Messingkvintett
First performed at BrassWind 2021 by NyNorsk Messingkvintett
Financed by

NORSK KULTURFOND
Kulturrådet

Scores available from NB noter, National Library of Norway, P.Box 2674 Solli, N-0203 OSLO, noter@nb.no
Royalties protected by TONO, P.b. 9171, Grønland, N-0134 OSLO, tono@tono.no
More info: www.knutvaage.com

EXPLANATION:
General instruction:

This piece gives all the involved performers freedom to improvise inside the “rules” given in score.

There are no parts available. All the players must get a copy of the score.

The length of senza misura bars (between 5 and 30 sec.) is from choice.

SIGNS AND ABBREVIATIONS:

REP————> repeat the previous action

—GRAD. TO—> gradually changed into (e.g. transform by little by little mixing next action more and more into previous action. The performer may vary the way of mixing or “morphing”)

————>FADE keep note until ”FADE”, and fade from that point during next cue

PERS————> playback og persosonal field recording through instrument

DM:0-AW: distance to microphone from zero to away from mic, e.g:

DM:0 as close as poss. (brass: optional inside bell)
DM:2 distance to mic. 2 cm
DM:10 distance to mic. 10 cm
DM:AW away from mic. (outside mic. range)

NB noter
This music is copyright protected

Very soft sounds can be rich and full because of microphones. It is important to follow the score instructions for distance to microphones.
The given material indicates what and how to play. When GRAD. TO, arrow is used, change the material from the first to the second phrase - before and after the arrow (see above)
The technical informations are always connected to the notated cell, so that the player must switch back and forth the different settings while morphing.

ABBREVIATIONS:
Cm: cup mute
Cmc: cup mute closed
Hm: harmon mute (on Horn in F, use a harmon for Bass Trombone)
Wah: harmon mute, tube in
Pr.m: practicing mute
blA: blow air
Lscr: lip scratch: lips firmly pressed and slow air stream to make sound similar to Vln. scratch
LflzA: lip flutter w.air: flutter w. lips (softly pressed), small distance to mouthpiece to avoid tone
TflzA: tongue flutter w. air
1/2: half valve gliss: press all valves half way down to make it poss. with full range gliss.
Hp: hand pop: pop on mouthpiece (on instrument) w. inside of flat hand
Tp: tongue pop: make “popping” sound by rapidly/firmly “releasing” tongue from palate (resonance into instr., but no normal sound)
Lp: lip pop: make “popping” sound by rapidly/firmly “releasing” lips from each other (resonance into instr., but no normal sound)
Lsm: lip smack: make sharp, very short kissing sound 1mm from mouthpiece
SLt: slap tongue
MP: mouthpiece only
Msm: mouthpiece smack: make sharp, very short kissing sound directly on mouthpiece (possible with or without instrument connected)
Kss: kissing sustained sound: very slow “kissing” of mouthpiece, slow air stream

NB noter
This music is copyright protected

The audio processing for the first version of multiMORF VII was implemented using a combination of audio processes such as reverbs, delays, modulation effects, spectral processing, granulation effects, harmonic synthesis, live and offline sampling, glitch effects (scratch, stutter, filter and granular) and resonator effects. Several of the processes are tempo synced with the live musicians and most effects were diffused over a surround sound system.

Sound Material Experiment 1:
Sound Material 2 lip flutter air Horn
Sound material 2 lip flutter air Trompet 1.wav
Sound material 2 lip flutter air Trompet 2.wav

Sound Material Experiment 2:
Sound material 3 toungue flutter air Horn.wav
Sound material 3 toungue flutter air Trombone.wav
Sound material 3 toungue flutter air Trompet 1.wav
Sound material 3 toungue flutter air Trompet 2.wav
Sound material 7 mouth piece low Horn.wav
Sound material 7 mouth piece low Trombone.wav
Sound material 7 mouth piece low Trompet 1.wav
Sound material 7 mouth piece low Trompet 2.wav

Sound Material Experiment 3:
Sound material 4 lip scratched Tuba.wav
Sound material 4 lip scratched Trombone.wav
Sound material 6 lip scratched high pithced Trompet 1.wav
Sound material 6 lip scratched high pithced Trompet 2.wav
Sound material 7 mouth piece low Trombone.wav
Sound material 1 blow air Tuba.wav

Sound Material Experiment 4:
Morf 2 Horn.wav
Morf 2 take 1 Tuba.wav
Morf 3 (uten trompet) Tuba.wav
Sound material 12 hand pop Tuba.wav

Sound Material Experiment 5:
Sound material 12 lip pop Horn.wav
Sound material 7 mouth piece low Horn.wav
Sound material 12 mouth smack Trompet 2.wav
Sound material 12 slap toungue Trombone.wav
Sound material 12 lip pop Tuba.wav

NB noter
This music is copyright protected

VISUAL TECHNIC:

In the *multiMORF remix** project Dembacke has been lowering her gaze, and the daylight has become the natural starting point for the visual design.
The pandemic of 2020/2021 has provoked Dembacke to take a proper look at her local environment through the artistic process.
To bring in nature, both as an ideal state and a destructive force, is the core element of the MultiMORF remix visual project.

Technical needs for the visual design:

- Computer with dedicated graphic card and live video software

Inputs:
MIDI controller with physical faders
Soundcard
Outputs:
Video signal to projector

- Projector and projection screen
- Lighting fixtures controlled by DMX lighting console

This music is copyright protected
NB noter

Score is transposed

multiMORF VII

Knut Vaage

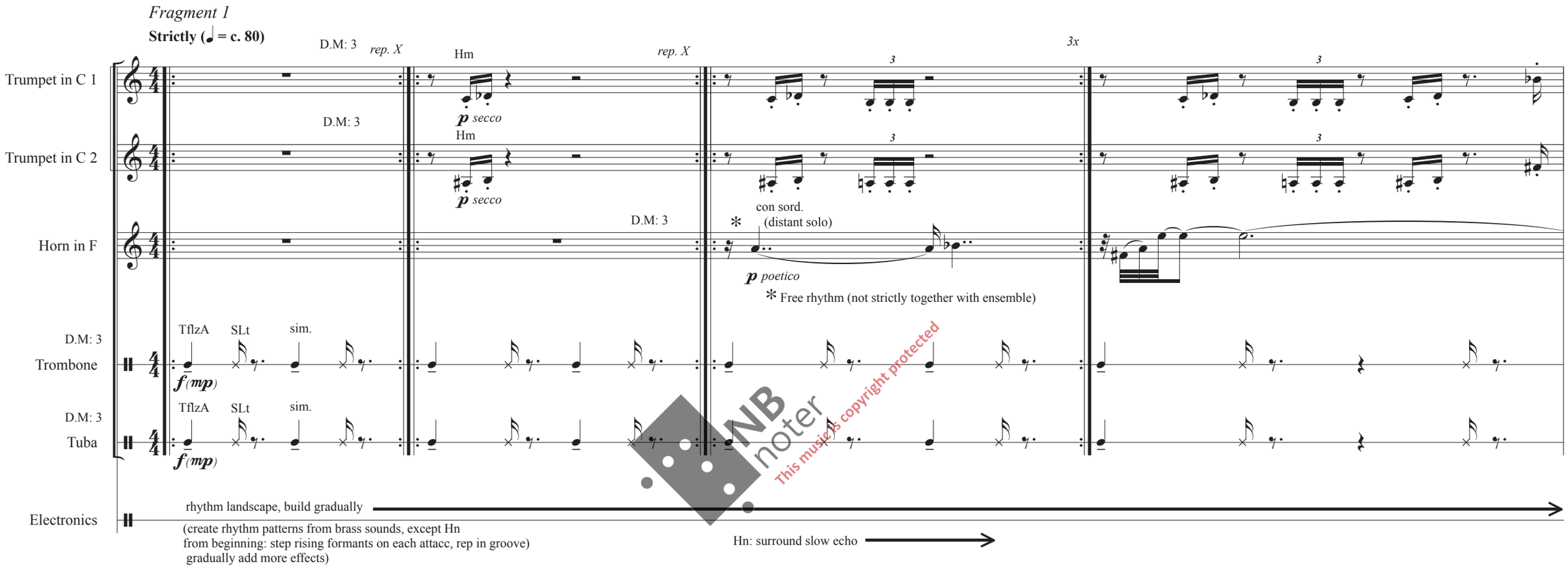

NB noter
This music is copyright protected

© K.V/T.T

5

C Tpt. 1

C Tpt. 2

Hn.

Tbn.

Tuba

Electr.

lunga

bend

(keep Tbn/Tu - function) →

(build rhythm pattern ad lib.)

(Hn: surround echo)

Solo

NB noter This music is copyright protected

10

3x

3x

cresc. p. a p.

Hm

Cmc

p cresc. p. a p.

f

ff brassy

stop electonics

continue rhythm patterns
build into (multitude)

deconstruct
gradually
into silence

Sound material 1 (blow air)

Morph 2

Sound material 2 (Lip flutter air low pitched)

16

Senza misura

C Tpt. 1 — bl A — D.M: 0 – – – – 5 – – – – 0 sim. — REP — Tp — GRAD. TO — (cue) — REP — (cue) — stop on cue — TflzA — D.M: 0 – – – – 5 – – – – 0 sim. — REP — stop on cue

C Tpt. 2 — bl A — D.M: 0 – – – 5 – – – – – 0 sim. — REP — Tp — GRAD. TO — REP — stop on cue — TflzA — D.M: 0 – – – 5 – – – – – 0 sim. — REP — stop on cue

Hn. (open) — bl A — D.M: 0 – – – 5 – – – – 0 sim. — REP — D.M: 0 Hp — GRAD. TO — REP — stop on cue — TflzA — D.M: 0 – – – 5 – – – – 0 sim. — REP — stop on cue

Tbn. (open) — bl A — D.M: 0 – – – – 5 – – – – – 0 sim. — REP — D.M: 0 Hp — GRAD. TO — REP — stop on cue — TflzA — D.M: 0 – – – – 5 – – – – – 0 sim. — REP — stop on cue

Tuba (open) — bl A — D.M: 0 – – – 5 – – – – – 0 sim. — REP — Tp — GRAD. TO — REP — stop on cue — TflzA — D.M: 0 – – – 5 – – – – – 0 sim. — REP — stop on cue

Electr. — SF: Sound material experiment 1 → FADE — SF: Sound material experiment 3 →

Build rhythms → Continue rhythm patterns →

Fragment 2

*** Tempo ad lib.**

* one breath must be possible (adjust tempo)

24

C Tpt. 1 — bucket, flz D.M: 5 – – – – – – – D.M: 8 – – – – – – D.M: 5 sim. — bend down

C Tpt. 2 — bucket, flz D.M: 5 – – – – – – – D.M: 8 – – – – – – D.M: 5 sim. — bend down

Sing Hn. Play — D.M: 5 – – – – – – – – D.M: 8 – – – – – – D.M: 5 sim.

Sing Tbn. Play — D.M: 5 – – – – – – – – D.M: 8 – – – – – – – D.M: 5 sim.

Sing Tuba Play — D.M: 5 – – – – – – – – D.M: 8 – – – – – – – – D.M: 5 sim.

Electr. — SF: Sound material experiment 3 →

Continue rhythm patterns enforce soundmorphing — fading very gradually (until bar 37) →

NB noter
This music is copyright protected

33

Senza misura

C Tpt. 1 — 1/2 — REP

C Tpt. 2 — 1/2

Hn. — * po - a - o - a - o - a - o - a

Tbn.

Tuba — * po - a - o - a - o - a - o - a — REP

REP. LAST SOUND IND. AD LIB.

Electr. — SF: Sound material experiment 3 (continue fading rhythm patterns) — FADE

* *sing/play unis. (like digeridoo) adapt octave for voice*

NB noter This music is copyright protected

Fragment 3

Senza misura (lento)

42

C Tpt. 1 — D.M: 3 Cmc — lunga

C Tpt. 2 — D.M: 3 Cmc — lunga

Hn. — D.M: 3 * Hm — lunga

Rais up: playback from iPhone (turn screen against audience)

Tbn. — PERS

(candy sounds)

Tuba — D.M: 3 Cmc — lunga

Electr. — Effect ad lib Tutti — gliss. down — SUSTAINER

* Horn: use a Bass Tbn Harmon mute

(PERS → playback of field recording from home)

Fragment 3B

Lento rubato

Tutti D.M:3

53

C Tpt. 1

C Tpt. 2

Hn.

Tbn.

Cmc

Tuba

Electr.

p dolce

Abstract soundscape

61

Senza misura

pp

gliss. down

(CONT.)

SUSTAINER

NB noter This music is copyright protected

Morph 1

Strictly (♩ = c. 80)

syllables below notes indicating text articulated firmly to variate air sound

Sound material (13)

(𝅗𝅥 = c. 30)

Tutti accel. **(𝅗𝅥 = c. 76)**

69

C Tpt. 1

open D.M: 0 bl A sah fh *rep. X* **GRAD. TO** fh sah **REP** stop on cue D.M: 3 SLt Msm **REP** **REP**

C Tpt. 2

open D.M: 0 bl A sah fh **GRAD. TO** fh sah **REP** stop on cue D.M: 3 SLt Msm **REP** **REP**

Hn.

Rais up: playback from iPhone (turn screen against audience)

PERS (child running) **FADE** (Play) D.M: 3 open SLt Msm **REP** **REP**

Tbn.

open D.M: 0 bl A fh sah **GRAD. TO** fh sah **REP** stop on cue D.M: 3 SLt Msm **REP** **REP**

Tuba

open D.M: 0 bl A fh sah **GRAD. TO** fh sah **REP** stop on cue D.M: 3 SLt Msm **REP** **REP**

Electr.

(sustainer) **FADE** Build rhythms SF: Sound material experiment 4 Continue

Fragment 4

(𝅗𝅥=𝅗𝅥) **Rhythmically (♩ = 76)**

77

TUTTI: if needed to breathe, skip a few single notes by own choice

C Tpt. 1

(CONT.) (morph.) (time to prepare)

C Tpt. 2

(CONT.) (morph.) (time to prepare) D.M: 5 ord. *p leggiero* sim.

Hn.

(CONT.) (morph.) (time to prepare) D.M: 5 ord. *p leggiero* **CONT. PATTERN** sim.

Tbn.

(time to prepare) (morph.) D.M: 5 ord. soft articulation w. tongue to match valve-phrasing *p leggiero* **CONT. PATTERN** sim.

Tuba

D.M: 5 ord. *p leggiero* 8va **CONT. PATTERN** sim.

Electr.

SF: Sound material experiment 4 **FADE**

Morph continually, opt. changed, but in sync (Groovy ♩ = c. 80)

(CONT.)

(rhytms from Morph 1)

Effect ad lib - - ->

NB noter This music is copyright protected

Morph 5

Senza misura

LWppl: **GRAD. TO** irr Rhythms

81

D.M: 5 ord.

C Tpt. 1 — *p leggiero* — sim. — **CONT. PATTERN** → Pr.m. *mf (play ff)* — **PLING PLONG IMPRO** (Pitches ad lib, quasi dodecaphony) — *lunga*

C Tpt. 2 — sim. — **CONT. PATTERN** → Pr.m. *mf (play ff)* — **PLING PLONG IMPRO** (Pitches ad lib, quasi dodecaphony)

Hn. — **(CONT.)** → Pr.m. *mf (play ff)* — **PLING PLONG IMPRO** (Pitches ad lib, quasi dodecaphony)

Tbn. — **(CONT.)** → Pr.m. *mf (play ff)* — **PLING PLONG IMPRO** (Pitches ad lib, quasi dodecaphony)

Tuba — **(CONT.)** → Pr.m. *mf (play ff)* — **PLING PLONG IMPRO** (Pitches ad lib, quasi dodecaphony) — tacet to change mute

(8va)

Electr. (rhytms from Morph 1)

(CONT.) → **MORPH** → desolve rhytms from Morph 1

CONT. PATTERN → **FADE**

gradually add effects/enforce multitude

NB noter This music is copyright protected

Fragment 4B

Rhythmically (♩ = 76)

86

C Tpt. 1 — *p* — **CONT. PATTERN** → tacet to change mute

C Tpt. 2 — *p* — **CONT. PATTERN** → tacet to change mute

Hn. — *p* — **CONT. PATTERN** → tacet to change mute

Tbn. — tacet to change mute

Tuba — D.M: 8 Cm *mf leggiero* (loco) — tacet to change mute — D.M: 8 Cm *p* *mf* *p sub.*

Electr. — **FADE**

CONT. PATTERN →

Morph continually, opt. changed, but in sync (Groovy ♩ = c. 80)

Effect ad lib Tutti

89

tacet to change mute

C Tpt. 1 (CONT.)

C Tpt. 2 D.M: 8 Cm

Hn. D.M: 8 mute

Tbn.

Tuba

Electr. CONT. PATTERN

NB noter This music is copyright protected

D.M: 8 Cm

92

Senza misura

C Tpt. 1

C Tpt. 2

Hn.

Tbn.

Tuba

Electr. CONT. PATTERN

fade in high reverberation

continue SURROUND ECHO/REVERB

Sound material

11 (Harmon mute highest pitches possible)

Horn-walk (walk from playing position in a big circle out of the hall and back into 1st playing position)

(♩ = c. 80)

96

C Tpt. 1 — D.M: 3 — Hm — *mf secco* — (Hm) — *mp secco*

C Tpt. 2 — D.M: 3 — Hm — *mf secco* — (Hm) — *mp secco*

Hn. — D.M: 3 — Hm — *mf secco* — open — Walk, crossing audience, leave the hall while playing — *adjust dynamics to surroundings* — bend

Tbn. — D.M: 3 — Hm — *mf secco* — (Hm) — *mp secco*

Tuba — D.M: 3 — Cmc — *mf secco* — (Cmc) — *mp secco*

Electr. — fade reverb — Abstract background (Hn w.-out mic.) surround echo on Tpts/Tbn/Tu

* Horn freely. Ens. follow and make cues for playing together

NB noter This music is copyright protected

107

C Tpt. 1 — (secco) — *rep. ad lib.*

C Tpt. 2 — (secco) — *rep. ad lib.*

Hn. — (continue walking) — *ff* — repeat this pattern until outside the hall behind audience — *f* — *rep. ad lib.*

Tbn. — (secco) — *rep. ad lib.*

Tuba — (secco) — *rep. ad lib.*

Electr. — **(CONT.)** — Opt. reduce echo amount — Opt. reduce echo amount

Lento rubato (ensemble)

114

C Tpt. 1 — Cmc — *p dolce*

C Tpt. 2 — Cmc — *p dolce*

Hn. — OFFSTAGE — horngliss. ad lib. — *ff* — 3x — ✻ (independent from ens.) — walk back into position - - -> — chrom. — flz. — bend — ord. rapidly — flz. — bend — ord. rapidly

*adjust dynamics to position p. a p. dim. (**ff** offstage = **mf** on stage)*

Tbn. — Cmc — *p dolce*

Tuba — Cmc — *p dolce*

Electr. — electr. solo, soft, delicate — (abstract soundlandscape)

✻ The Horn-solo is independent from the rest of the ensemble
Perform Horn freely and keep the rest of the ensemble together like notated.

NB noter
This music is copyright protected

120

C Tpt. 1 — *pp*

C Tpt. 2 — *pp*

Hn. — flz. — bend — *rep. ad lib. if needed* — in position — bend

Tbn. — *pp*

Tuba — *pp*

Electr. — (CONT.) — SUSTAINER

Morph 3 ✻ *Tpt. 2 make long fermatas*

129

Strictly (♩ = c. 80) **Senza misura** **Strictly** **Senza misura**

C Tpt. 1: Tp D.M: 0 — (keep tempo) — **GRAD. TO** — Lp.

C Tpt. 2: Individual rhythm (no syno.) — D.M: 3 Hm ✻ — *p poetico* — D.M: 5 — *mf*

Hn.: Tp D.M: 0 — (keep tempo) — **GRAD. TO** — Lp.

Tbn.: Tp D.M: 0 — (keep tempo) — **GRAD. TO** — Lp.

Tuba: Tp D.M: 0 — (keep tempo) — **GRAD. TO** — Lp.

Electr.: rhythm landscape, build gradually (create rhythm patterns from brass, except Tpt 2) — rhythm landscape, continue steadily

(sustainer) — Tpt 2: surround slow echo — **FADE**

Sound material
2 (Lip flutter air low pitched)

134

C Tpt. 1: TflzA D.M: 0 – – – – – 5 – – – – 0 sim. — **REP** — stop on cue

C Tpt. 2: TflzA D.M: 0 – – 5 – – – – – 0 sim. — **REP** — Rais up: playback from iPhone (turn screen against audience) **PERS** — **FADE** (dog with ball, growling)

Hn.: TflzA D.M: 0 – – 5 – – – – – 0 sim. — **REP** — stop on cue

Tbn.: TflzA D.M: 0 – – 5 – – – – – 0 sim. — **REP** — stop on cue

Tuba: TflzA D.M: 0 – – – 5 – – – – – 0 sim. — **REP** — stop on cue

Morph 4

C Tpt. 1: MP low D.M: 0 – – – – – 5 – – – – 0 — **GRAD. TO** — D.M: 5 MP high — *mf secco*

Hn.: MP low D.M: 0 – – – 5 – – – – – 0 — **GRAD. TO** — D.M: 5 MP high — *mf secco*

Tbn.: MP low D.M: 0 – – – 5 – – – – – 0 — **GRAD. TO** — D.M: 5 MP high — *mf secco*

Tuba: MP low D.M: 0 – – – 5 – – – – – 0 — **GRAD. TO** — D.M: 5 MP high — *mf secco* — Rais up: playback from iPhone (turn screen against audience) **PERS** (bird song)

Electr.: **(CONT.)** — stop on cue — fade in rhythm landscape, continue steadily — **FADE**

NB noter This music is copyright protected

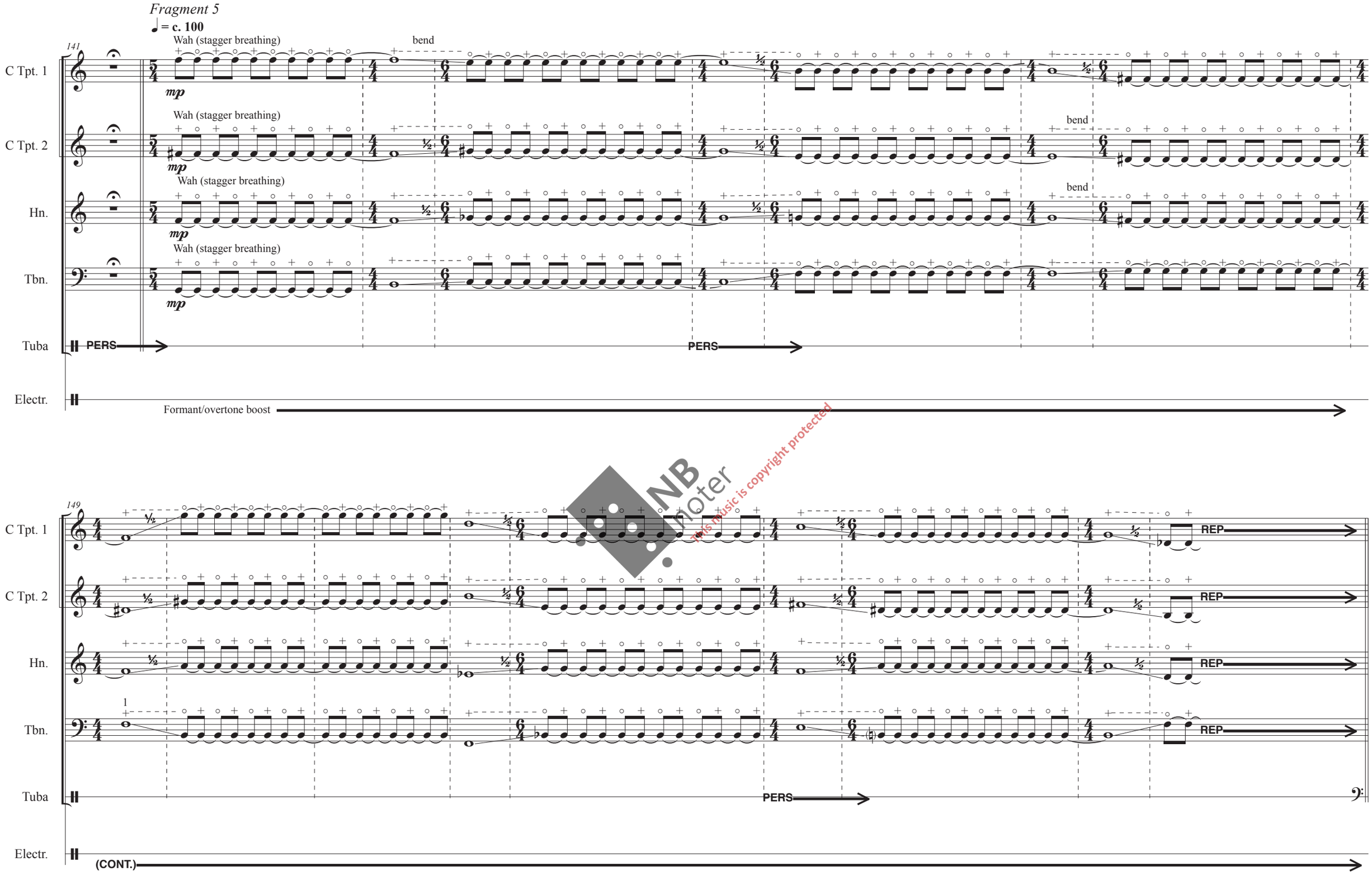

This music is copyright protected

Trumpet-walk (like Horn-walk)

Strictly (♩ = c. 80)

159

C Tpt. 1 — open — Solo — Walk, crossing audience, leave the hall while playing

adjust dynamics to surroundings

D.M: 3 C Tpt. 2 — Hm — *mp secco* — (secco)

D.M: 3 Hn. — * Hm — *mp secco* — (secco)

D.M: 3 Tbn. — Hm — *mp secco* — (secco)

D.M: 3 Tuba — Cmc — *mp secco* — (secco)

Electr. — Abstract background (Tpt 1 w.out mic.) Effects on ens.

* Horn: use a Bass Tbn Harmon mute

NB noter This music is copyright protected

164

C Tpt. 1 — (*f*) (*p*) (*f*)

C Tpt. 2

Hn.

Tbn.

Tuba

Electr. — (CONT.)

(continue walking)

repeat this pattern until outside the hall behind audience

168

C Tpt. 1

C Tpt. 2

Hn.

Tbn.

Tuba

Electr.

(secco)

(CONT.)

NB noter This music is copyright protected

173

stop
on cue

OFFSTAGE

chrom.

Lento rubato (ensemble)

f *ff*

Cmc

p dolce

Hm

Cmc

p dolce

Cmc

p dolce

Cmc

p dolce

electr. solo

Soft, delicate

reverberation only

Abstract soft delicate
soundlandscape

179

(from offstage)

Walk back into position - - - - >

C Tpt. 1

C Tpt. 2

Hn.

Tbn.

Tuba

Electr.

f *ff* *f* *ff*

*adjust dynamics to position p. a p. dim. (**ff** offstage = **mf** on stage)*

(CONT.)

NB noter This music is copyright protected

183

(adjust dynamics, gradually softer while entering the hall)

flz. bend ord. bend Back into Ens. bend

C Tpt. 1

C Tpt. 2

Hn.

Tbn.

Tuba

Electr.

pp

(CONT.)

Morph 5

191

Senza misura

LWppl: **GRAD. TO** irr Rhythms

lunga

C Tpt. 1 — Pr.m. *mf (play ff)* — **PLING PLONG IMPRO** (Pitches ad lib, quasi dodecaphony)

C Tpt. 2 — Pr.m. *mf (play ff)* — **PLING PLONG IMPRO** (Pitches ad lib, quasi dodecaphony)

Hn. — Pr.m. *mf (play ff)* — **PLING PLONG IMPRO** (Pitches ad lib, quasi dodecaphony)

Tbn. — Pr.m. *mf (play ff)* — **PLING PLONG IMPRO** (Pitches ad lib, quasi dodecaphony)

Tuba — Pr.m. *mf (play ff)* — **PLING PLONG IMPRO** (Pitches ad lib, quasi dodecaphony)

Electr. — **(CONT.)** reverberation only — gradually add effects/enforce multitude — continue patterns from Morph 5

NB noter This music is copyright protected

Sound material
(12) Lip smack

Rhythmically (♩ = 100)

196

D.M: 0 C Tpt. 1 — Lsm

D.M: 0 C Tpt. 2 — Lsm

D.M: 0 Hn. — Lsm

D.M: 0 Tbn. — Lsm

D.M: 0 Tuba — Lsm

Senza misura

Sound material
10 (Mouth piece highest pitches possible)

C Tpt. 1 — MP high *mf secco*

C Tpt. 2 — MP high *mf secco*

Hn. — MP high *mf secco*

Tbn. — MP high *mf secco*

Tuba — MP high *mf secco*

Electr. — SF: Sound material experiment 5 — build gradually to culmination — SF: Sound material experiment 3 — **(CONT.)** — **FADE**

Sound material
8 (Mouth piece gliss.)

Morph 1
Strictly (♩ = c. 80)

204

C Tpt. 1
C Tpt. 2
Hn.
Tbn.
Tuba
Electr.

MP gliss.

bl A
sah
fh
rep. X

GRAD. TO
REP
stop on cue
D.M: 3

(CONT.)
FADE
reverberation only
Build rhythms
CONT. PATTERN

CULMINATION
Sound material experiments/effects

Tuba-walk (like Horn-walk)
Strictly (♩ = c. 80)

210

Hm
mp secco

Sing
Play
Walk, crossing audience, leave the hall while playing
adjust dynamics to surroundings

Abstract background
(CONT.)
FADE
(rhytms from Morph 1)
(Tuba w.out mic) Effects on ens.

This music is copyright protected

215

C Tpt. 1

C Tpt. 2

Hn.

Tbn.

Tuba

sing/play unis.

Electr.

(CONT.)

(abstract background)

NB noter This music is copyright protected

220

C Tpt. 1

C Tpt. 2

Hn.

Tbn.

Tuba

(secco)

repeat this pattern until outside the hall behind audience

Electr.

(CONT.)

225

Lento rubato (ensemble)

C Tpt. 1

Cmc

p dolce

C Tpt. 2

Cmc

p dolce

Hn.

Cmc

p dolce

Tbn.

Cmc

p dolce

Tuba

CONT. PATTERN

OFFSTAGE
add voice

3x

ord. chrom.

fff

*adjust dynamics to position p. a p. dim. (**ff** offstage = **mf** on stage)*

Electr.

(CONT.)

SF: Sound material experiment 2

FADE

electr. solo
soft, delicate

Abstract soundlandscape

NB noter This music is copyright protected

231

C Tpt. 1

C Tpt. 2

Hn.

Tbn.

Tuba

flz. bend ord. flz. bend flz. bend

Electr.

(Sound mat. exp. continue)

FADE

(CONT.)

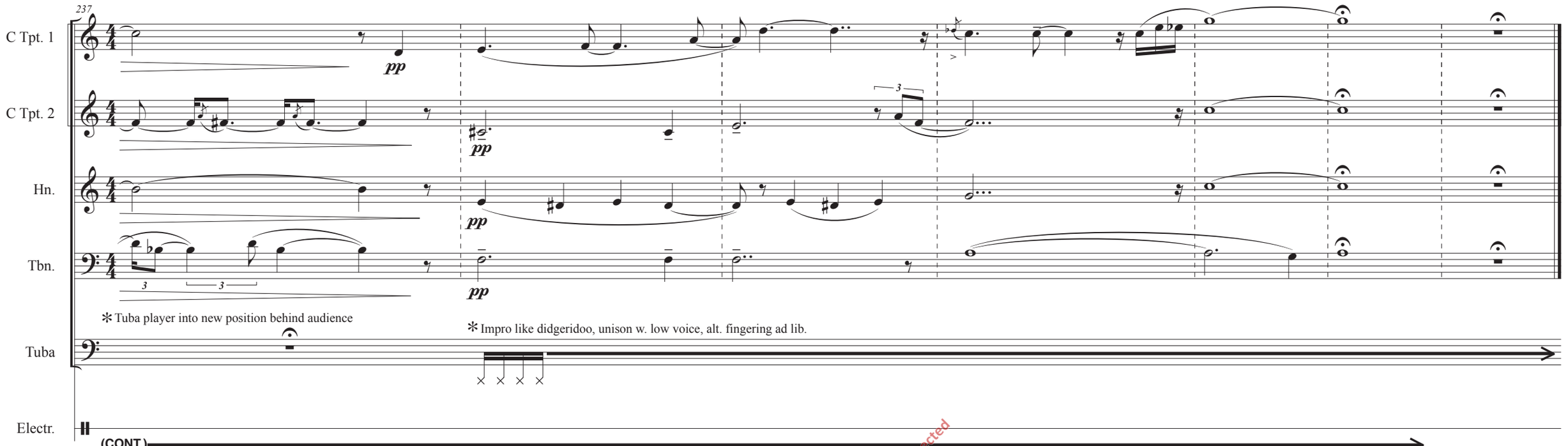

NB noter This music is copyright protected

FINE

If *multiMORF V* is next:
After finnish playing,
trumpets and horn
walk calmly towards
Tuba's new position
(behind audience)
Trombone remain
in front to be soloist

NB noter
This music is copyright protected

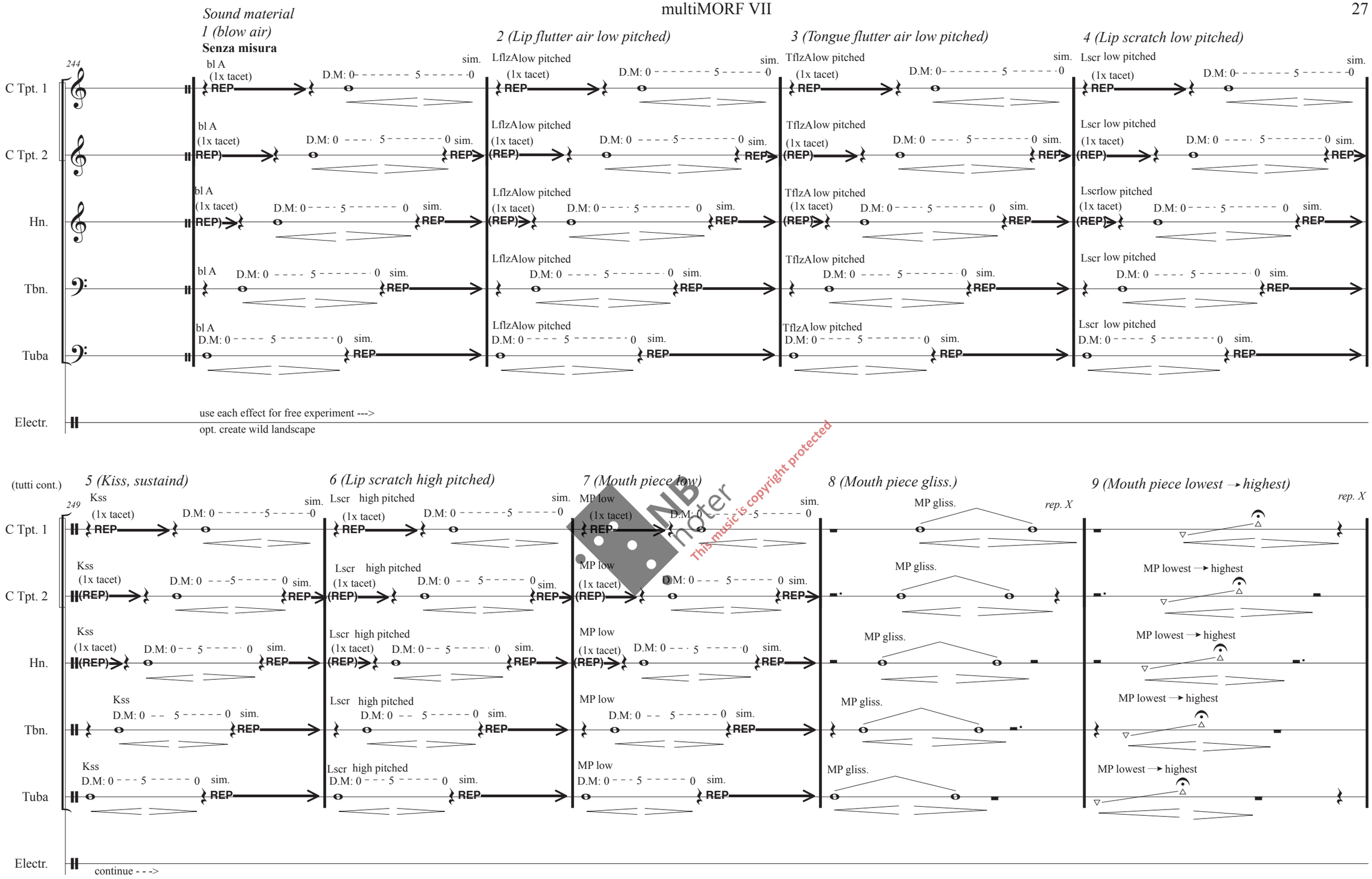
Sound material
1 (blow air)
Senza misura
2 (Lip flutter air low pitched)
3 (Tongue flutter air low pitched)
4 (Lip scratch low pitched)
244
C Tpt. 1
C Tpt. 2
Hn.
Tbn.
Tuba
Electr.
bl A
(1x tacet)
REP
D.M: 0 5 0
sim.
LflzAlow pitched
TflzAlow pitched
Lscr low pitched
Lscrlow pitched
use each effect for free experiment --->
opt. create wild landscape
(tutti cont.)
5 (Kiss, sustaind)
6 (Lip scratch high pitched)
7 (Mouth piece low)
8 (Mouth piece gliss.)
9 (Mouth piece lowest → highest)
249
Kss
Lscr high pitched
MP low
MP gliss.
rep. X
MP lowest → highest
continue - - ->
This music is copyright protected

10 (Mouth piece highest pitches possible)

11 (Harmon mute highest pitches possible)

254

C Tpt. 1 — MP high — *mf secco* — ord. — Hm — *mf secco*

C Tpt. 2 — MP high — *mf secco* — ord. — Hm — *mf secco*

Hn. — MP high — *mf secco* — ord. — Hm — *mf secco*

Tbn. — MP high — *mf secco* — ord. — Hm — *mf secco*

Tuba — MP high — *mf secco* — ord. — Cmc — *mf secco*

Electr. — free experiment for morphing

NB noter This music is copyright protected

Sound material

(12) Lip smack

Rhythmically (♩. = 100)

258

D.M: 0 C Tpt. 1 — Hp

D.M: 0 C Tpt. 2 — Hp

D.M: 0 Hn. — Hp

D.M: 0 Tbn. — Hp

D.M: 0 Tuba — Hp

Electr.

1 : build rhythms

2 : contrasting elements →

3 : Effects on instr.

Lag versjonar

med ulike

speleteknikkar:

bl A, (molto secco)

Tp

Lp

Lsm

Msm (D.M:3)

SLt (D.M:3)

Sound material (13)
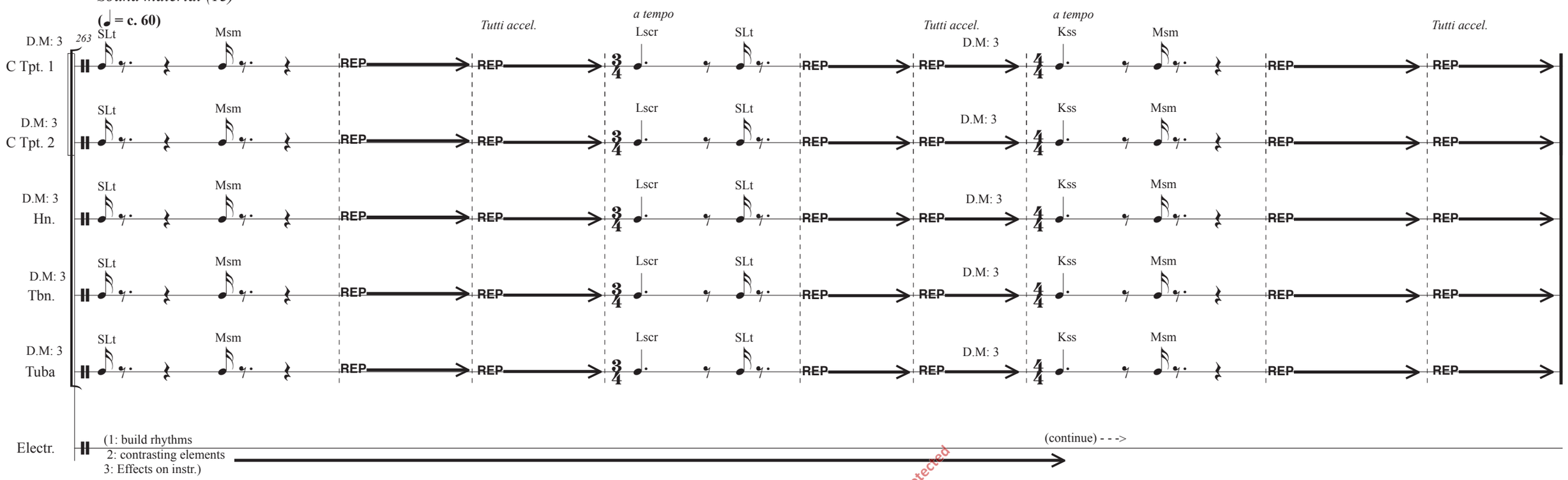
(♩ = c. 60)